BILL OF MATERIAL

ITEM	DESCRIPTION
1	Trough to have sooth gel-coated inside surface backed by FRP resin.
2	Spacer rods - PVC - 1" solid
3	Weir plates - fiberglass
4	Gasket - 1/2" neoprene sponge
5	Weir & spacer bolts - S.S. - 3/8" x 1 1/2"
6	Weir & spacer washers - S.S.
7	Weir nuts - S.S. - 3/8"
8	Drill anchors - S.S. - 1/2" x 4 1/4"
9	Hanger bracket & hardware - S.S.
10	Hanger rods - S.S. 3/4"
11	Hanger angles & hardware - S.S.
12	Steel angle - 1 1/2" x 1 1/2" x 1/4"

Standard Widths: 12", 15", 18", 21", 24", 36" + cust.

Standard colors: White or Turquoise

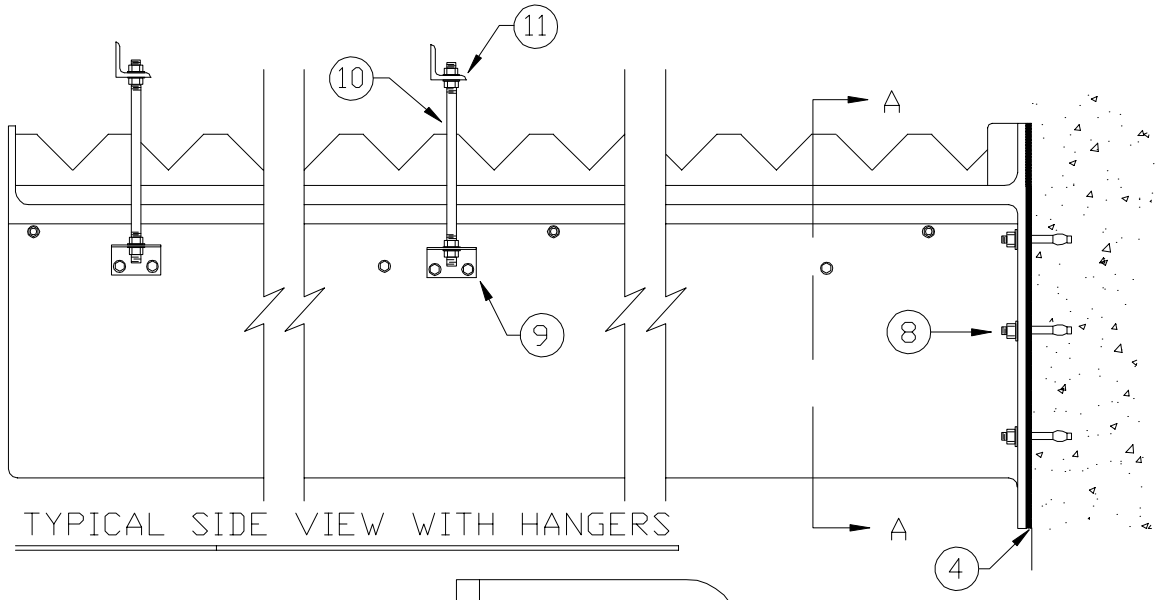

TYPICAL SIDE VIEW WITH HANGERS

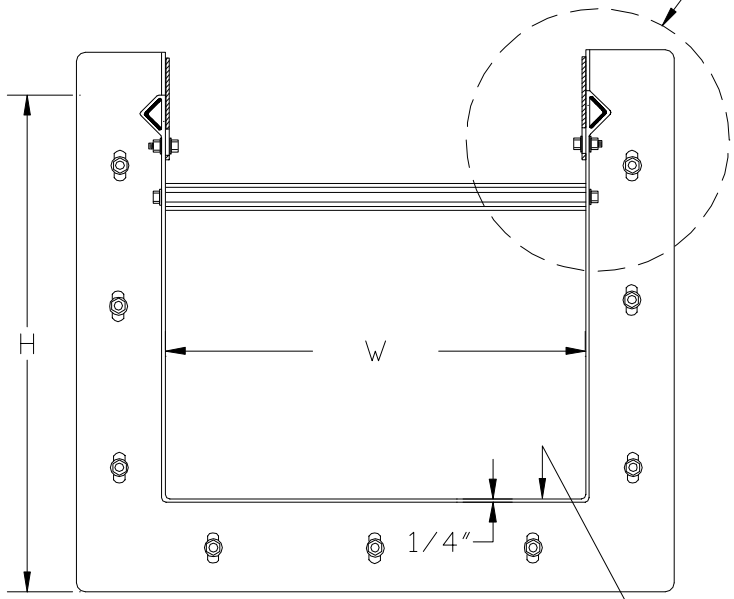

VIEW A - A

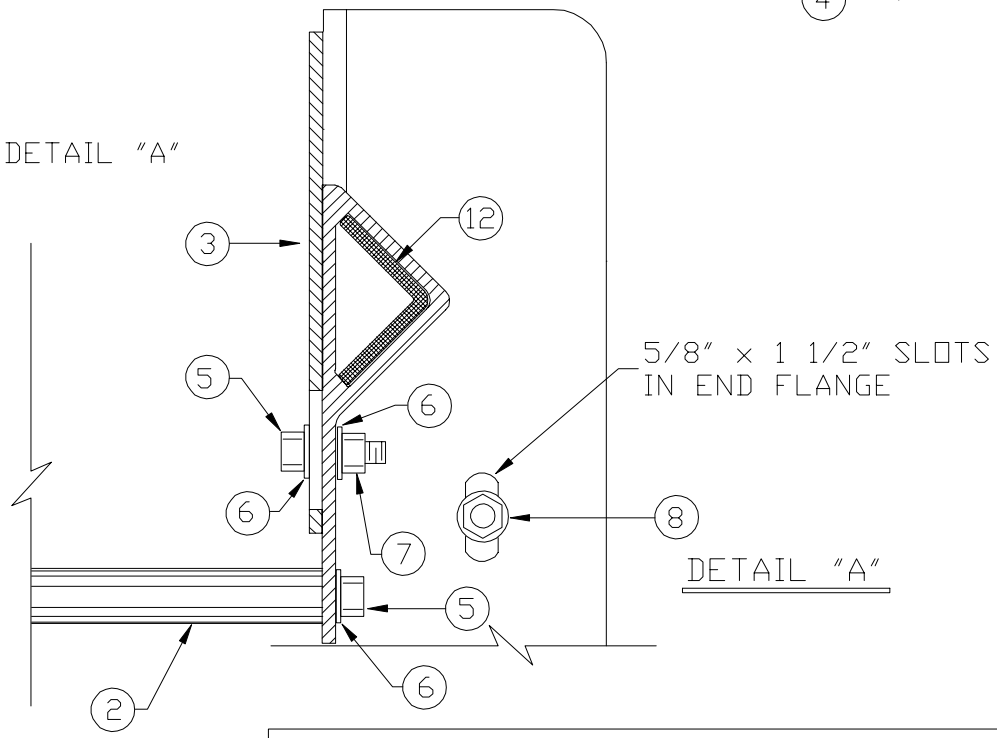

DETAIL "A"

STRAIGHT, FLAT BOTTOM TROUGHS

WARMINSTER FIBERGLASS